Chicago Pneumatic
1800 Overview Drive • Rock Hill SC • 29730 USA

CP890C
Air Sander

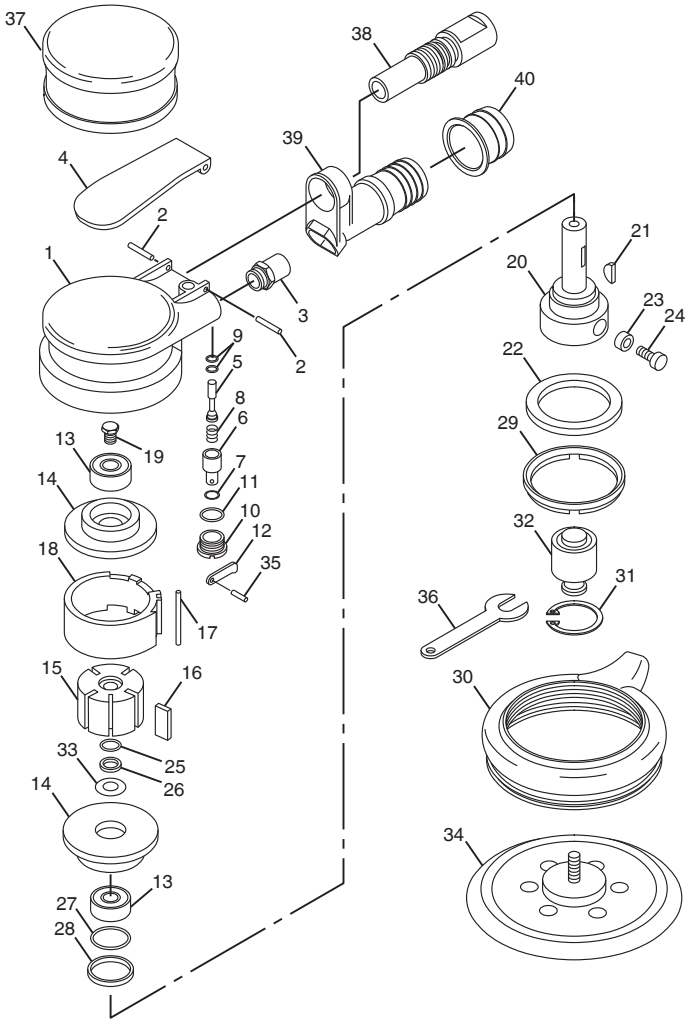

Index No.	Part No.	Description	No. Req'd.
1	CA154899	Housing- Motor (B)	1
2	CA148534	Pin-roll (3 mm x 12 mm)	2
3	CA148535	Bushing-Air Inlet (1/4" NPT)	1
4	CA157427	Lever-Throttle	1
5	CA148537	Stem-Throttle Valve	1
6	CA148538	Regulator	1
7	CA148539	O-Ring	1
8	CA148540	Spring	1
9	CA148541	O-Ring	2
10	CA148542	Nut-Regulator	1
11	CA148543	O-Ring	1
12	CA148544	Lever-Regulator	1
13	CA148545	Bearing-Ball	2
14	CA148546	Plate-End	2
15	CA157097	Rotor	1
16	CA148548	Set-Rotor Blade (5)	1
17	CA148549	Pin-Liner Dowel	1
18	CA148550	Liner	1
19	CA148551	Screw-Hex	1
20	CA148552	Shaft	1
21	CA148553	Key-Woodruff	1
22	CA148554	Washer	1

Index No.	Part No.	Description	No. Req'd.
23	CA148555	Balancer	1
24	CA148556	Screw-Balancer	1
25	CA148557	O-Ring	2
26	CA148558	Washer	2
27	CA148559	O-Ring	1
28	CA148560	Washer	1
29	CA148561	Ring-Lock	1
30	CA157098	Shroud Central Vacuum	1
31	CA148563	Ring-Retaining	1
32	CA154902	Assembly-Bearing Shaft (B)	1
33	CA157099	Shim	2
34	CA148566	Pad-Sanding Vacuum (6 in. dia.)	1
35	CA148567	Pin-Roll	1
36	CA154896	Wrench-Spanner (B)	1
37	CA148569	Cover-Motor Housing	1
38	CA157100	Muffler-Exhaust	1
39	CA157101	Adaptor-Exhaust	1
40	CA157359	Adaptor-Bushing	1

Tune-Up Kit
CA154947 (Incl: Index Nos. 7, 9, 11, 16, 25, 26, 27 & 31)

PRINTED IN USA GD/03-01