RP2008

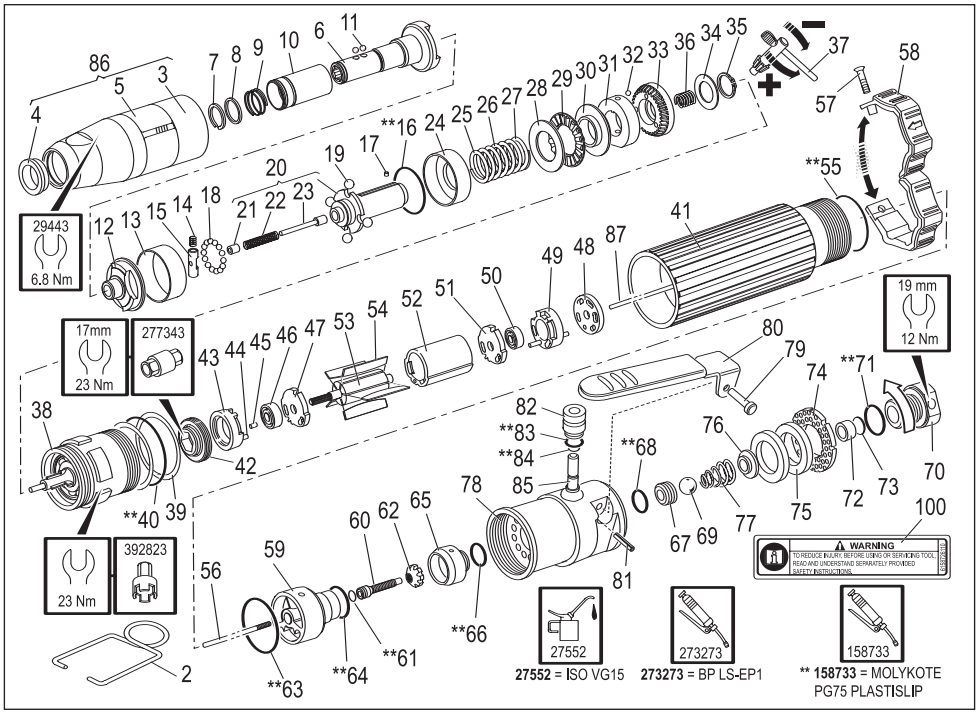

Item	Part No.	Description	Qty.
2	2050482253	Suspension Bail,	1
3	2050480063	Clutch Case	1
4	2050481463	Bearing, spindle	2
5	76713	Clip, spring	1
6	406473	Bit Holder, 1/4" hex	1
7	2050481663	Circlip	1
8	2050481933	Spacer	1
9	301013	Spring	1
10	2050481653	Sleeve, Q/R coupling	1
11	280313	Ball, steel	2
12	301273	Clutch Cam	1
13	2050481593	Retaining Sleeve	1
14	307123	Spring	1
15	2050481583	Latch Pin	1
16	239753	'O' Ring	1
17	301283	Roller	1
18	72228	Ball, 3/32	14
19	66868	Ball, 5/32	4
20	301163	Clutch Spindle	1
21	301193	Plug	1
22	301203	Spring	1
23	301183	Push Rod	1
24	301253	Ball Cup	1
25	179133	Spring, (black)	1
26	179923	Spring, (white)	1
27	304853	Spring, (natural)	1
28	301313	Thrust Washer	1
29	301303	Thrust Race	1
30	301213	Thrust Washer	1
31	2050481573	Lock Ring	1
32	72408	Ball, 1/8"	3
33	301223	Adjusting Ring	1
34	2050481503	Washer	1
35	42353	Circlip	1
36	252563	Spring	1
37	29932	Chuck Key	1
38	2050481233	Gearbox Module (1100 rpm), complete	1
39	2050481763	Spacer	2
40	380763	'O' Ring	1
41	205048993	Case, motor	1
42	2050481673	Nut	1
43	2050481523	Housing, front bearing	1
44	259953	Pin, drive	1
45	2050481703	Location Pin	1
46	33433	Single Row Ball Journal	1
47	2050481543	Plate, front bearing	1
48	2050481603	Transfer Plate	1
49	459313	Housing, rear bearing	1
50	8843	Bearing	1
51	2050481533	Plate, rear bearing	1
52	285503	Cylinder	1
53	391613	Rotor, 9T	1
54	461613	Blade, rotor dry	5
55	402993	'O' Ring	1
56	392833	Push Rod	1
57	393053	Screw, self tapping	1
58	392003	Reverse Value Actuator	1
59	457903	Reverse Valve	1
60	455573	Valve Stem	1
61	320413	'O' Ring	1
62	455583	Valve Top	1
63	314943	'O' Ring	1
64	402253	'O' Ring	1
65	393103	Connecting Tube	1
66	41513	'O' Ring	1
67	444713	Valve Seat	1
68	250913	'O' Ring	1
69	15043	Ball	1
70	393643	Adaptor	1
71	392493	'O' Ring	1
72	392953	Retainer	1
73	176303	Filter	1
74	316223	Exhaust Ring	1
75	395123	Silencing Felt	2
76	2050481953	Guide	1
77	455603	Spring	1
78	2050480023	Control Top	1
79	235853	Rivet	1
80	2050480073	Lever	1
81	311523	Pin, spring	1
82	2050481643	Guide	1
83	216463	'O' Ring	1
84	216473	'O' Ring	1
85	2050481923	Rod, valve	1
86	2050480823	Clutch Case Module	1
87	2050481723	Push Rod	1
100	6158726110	Warning Label	1

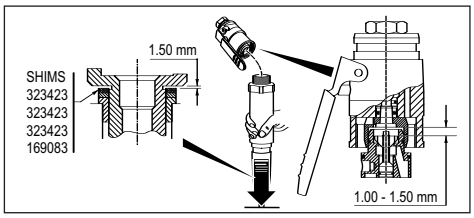

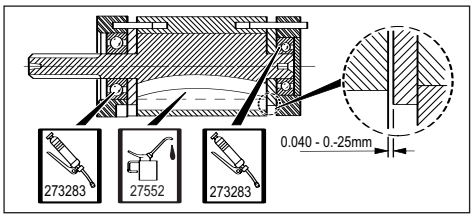

© 2004. Desoutter. HP2 7DR. UK

INDUSTRIAL TOOLS
SALES AND SERVICE LOCATIONS

CPD Asia
PO Box 1516
Shatin Central Post Office
New Territories
or
Unit 2103 Citimark
28 Yuen Shun Circuit
Shatin, New Territories
Hong Kong
Tel: (852) 2357 0963
Fax: (852) 2763 1875

Atlas Copco Tools Australia
P O Box 6133
Blacktown
NSW 2148
or
3 Bessemer Street
Blacktown
NSW 2148
Australia
Tel: (61) 2 9621 9900
Fax: (61) 2 9621 9966

Chicago Pneumatic Brasil Ltda
Av.Mascote, 159
CEP: 04363-000
Sao Paulo, SP 04363000
or
Av.Mascote, 159
Sao Paulo, SP 04363000
Brazil
Tel: (55) 62 73 14
Fax: (55) 55 63 92 08

CPDI China
11/F, China
Venturetech Plaza
No 819, Nanjing West Road,
Shanghai- 200041
China
Tel: (86) 21 62551331 (ext 556)
Fax: (86) 21 6258 7038

CPD International
Eaton Road, Hemel Hempstead
Herts, HP2 7DR
England
Tel: (44) 1442 344 300
Fax: (44) 1442 344 602

Desoutter Belgium & Luxembourg
Bd. Du Souverain 47 Vorstlaan
Bruxelles 1160 Brussels
Belgium
Tel: (32) 2 660 4938
Fax: (32) 2 672 6092

Georges Renault
199 route de Clisson
BP 13627
44236 St Sébastien sur Loire
Cedex
France
Tel: (33) 2 40 80 20 00
Fax: (33) 2 40 33 27 07

Desoutter Germany
Edmund-Seng-Strasse 3-5
63477 Maintal
Germany
Tel: (49) 6181 4110
Fax: (49) 6181 411184

Chicago Pneumatic Sales
A Division of Atlas Copco India Ltd
Chemtex House, First floor
Main Street, Hiranandani Complex
Powai, Mumbai – 4000 76
India
Tel: (91) 22 570 89 11
Fax: (91) 22 570 50 42

Desoutter Italy
Viale Repubblica 65
20035 Lissone
Italy
Tel: (39) 039 244 101
Fax: (39) 039 465 5025

Desoutter Netherlands
Charles Petitweg 7 - 8
4827 HJ Breda
Netherlands
Tel: (31) 765 878 668
Fax: (31) 765 878 825

Desoutter Iberia
c./ Serrano 120
28006 Madrid
Spain
Tel: (34) 91 590 3152
Fax: (34) 91 590 3161

Atlas Copco Industrial Technique
A division of
Atlas Copco S.A.(pty) ltd.
PO Box 14110
Witfield 1467
or
Hughes Business Park
Salinga Road
Witfield Ext 30
Boksburg 1460
South Africa
Tel: (27) 11 821 9300
Fax: (27) 11 821 9360

Desoutter Sales UK
Eaton Road, Hemel Hempstead
Herts, HP2 7DR
England
Tel: (44) 1442 344 301
Fax: (44) 1442 344 600

Chicago Pneumatic Tool Co.
1800 Overview Drive
Rock Hill
South Carolina 29730
USA
Tel: (1) 803 817 7000
Fax: (1) 803 817 7257

© 2004. Desoutter. HP2 7DR. UK